POLYCRAFT

SOFT QUIET RIDE | STRONG | DURABLE | AWESOME ON WATER PERFORMANCE | CATALOGUE

P4
300 Tuffy

P6
410 Challenger

P8
450 Drifter

P10
480 Brumby

P12
530 Warrior

P14
599 Frontier

P16 / 17
Commercial Boats & Trailers
Optional & Standard Features

P18
How Tough are Polycrafts?

P19
Boat Range Schematics

Polycraft Boats

The emergence of roto-moulded polyethylene boats is one of the fastest growing trends in the marine industry today. Canoes, sailing boats and now outboard powered fishing and recreational boats are taking advantage of this unique material which provides customer benefits well in excess of alternative materials traditionally used in the industry.

Polycraft are dedicated to producing strong, low maintenance boats perfect for the hard core fisherman and the recreational boater.

STRENGTH, STABILITY AND A SOFT, QUIET RIDE COUPLED WITH AWESOME ON WATER PERFORMANCE.

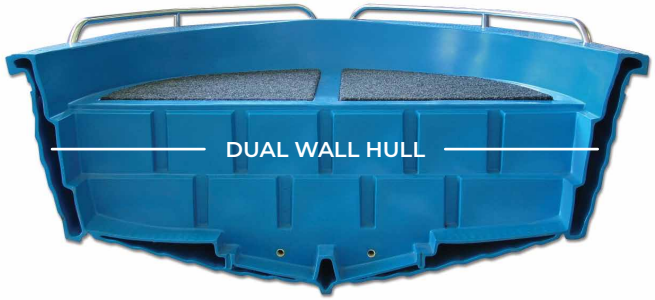

POLYCRAFT

MAKING BOATS SINCE 2000

100%

Polyethylene is one of the most environmentally friendly materials used in the manufacture of marine products.

The polyethylene used in the manufacture of Polycraft boats is sourced from Australian natural gas, processed in Australia to include colour, UV inhibitors and other additives.

Polyethylene is not classified as hazardous according to the criteria of the National Occupational Health and Safety Committee and the poly pellets used in the manufacturing process are considered to be environmentally inert.

During the manufacturing process Polyethylene has minimal concentration of major fume constituents, which means that there is minimal discharge into the atmosphere.

There is no waste in the manufacturing process as all off cuts are returned to the compounder for recycling and then reused in the manufacture of a wide range of products including road barriers, pallets etc.

Polyethylene provides a clean, recyclable alternative to traditional boat building materials.

Truly the material of the 21st Century.

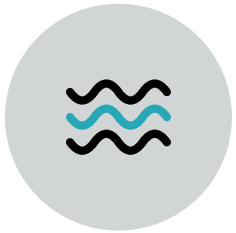

Stability

The unique hull design features pronounced reverse chines which contribute to unmatched stability at rest. The reverse chines also promote lift when accelerating onto the plane and allow for tighter cornering at high speed.

Soft Ride

Polycraft boats feature a unique, soft ride. Polycraft boats flex to absorb the impact of the sea, just like the shock absorbers on your car deflect the jarring from potholes in the road.

Less Noise

Polycraft's dual wall hull absorbs both engine noise and the noise of the sea. This results in a quieter ride and a more enjoyable day on the water. If fishing is your passion you quietly approach your favourite fishing spot and not scare off the fish.

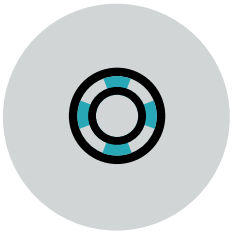

Flotation

Polyethylene has natural buoyancy and will float unaided when placed in water. The unique dual wall construction traps air in the cavity between the dual walls and helps contribute to buoyancy.

Strength

Polyethylene has been independently tested to show five times the impact resistance of fibreglass. A Polycraft boat will retain its strength for may years.

Low Maintenance

Polyethylene is very easy to maintain, clean and repair. In addition, it is less susceptible to marine growth than many other materials.

Inert Material

Polyethylene is an inert material that is not affected by electrolysis which can be found in aluminium boats or osmosis that can affect fibreglass boats. In the harsh marine environment a Polycraft will keep looking good for longer.

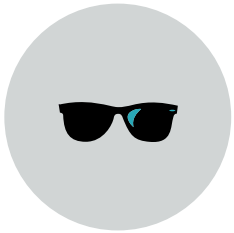

UV Stabilised

Polycraft boats are manufactured from UV stabilised marine grade polyethylene designed for extended use in direct sunlight. The colour is part of the material and will never need painting.

Dual Skin Hull

The unique dual wall hull is manufactured in one piece. There are no seams, welds or joins so the hull is extremely strong and durable.

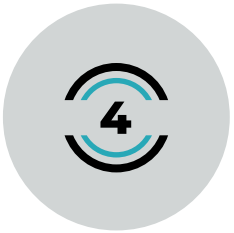

Hull Warranty

If used for recreational purposes, Polycraft offers a four year manufacturer's warranty. A one year warranty applies for commercial use (refer www.polycraft.com.au/warranty-conditions).

Increase you standard 4 year hull warranty to 6 years, refer to page 16.

Meet Australian & NZ Standards AS/NZS ISO 9001:2008

Polycraft boats are Quality Management System Certified.

Are Australian Owned and manufactured

All Polycraft boats are manufactured in Bundaberg a coastal town in Queensland popular for its waterways .

300 Tuffy

The 300 Tuffy is a great option for use as a tender vessel for larger craft.

Its incredible stability and shallow draft makes it popular with fishermen who want a small go anywhere boat to reach those hard to access areas.

New and improved features

- Front cast deck, rear seats have sealed integrated storage and an integrated Polyethylene hinged lid with diamond pattern, non-skid surface.
- Floor and gunwales have sandblasted non-skid surfaces.
- Larger steps on rear for easy entry into boat.
- Anchor well is larger and has integrated through hull drain hole.
- Refined hull design for better on water performance whilst still retaining the legendary stability at rest of the original Tuff Tender.
- Recessed Tow eye to protect against damaging gel coated or painted surfaces (if used as a Tender for a larger vessel).

Incredible stability

Specifications

Length:	3.05 m
Length (boat/motor/trailer):	4.30 m
Height on trailer:	1.10 m
Beam:	1.50 m
Depth:	0.58 m
Weight:	108 kg
Shaft length:	15 inches
Max HP rating:	15 HP
Capacity:	3 people (217 kg)

Standard Features

1. Recessed tow eye
2. Anchor well with drainage
3. Cleat
4. Cast desk/seat with storage & non-slip surface
5. Non-slip floor with drainage
6. Rear seats with storage & non-slip surface
7. Passenger hand rails
8. 2 x rod holders
9. Rear step
10. Alloy transom plate

Optional Extras

2 x extra rod holders

Optional bow mount electric rigging

Survey standard level flotation

Lifting points

Carpeted floor

Refer to page 17 for more details

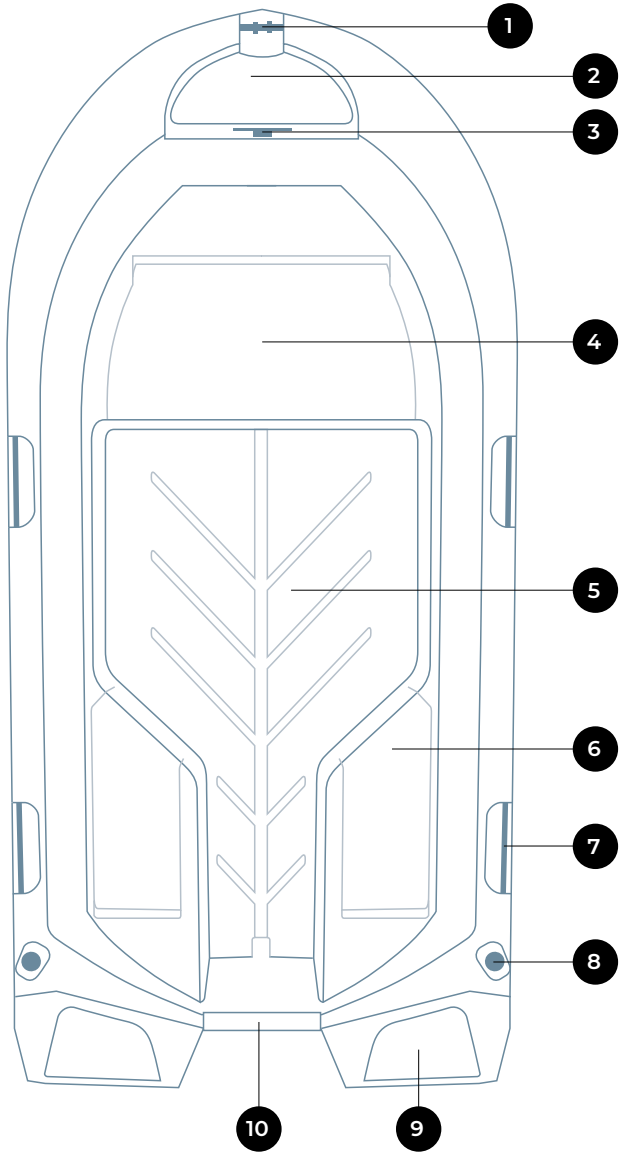

Note: The Tuff Tender is still available by special order.

Check out the 300 Tuffy video on the Polycraft Facebook page.

Gull Grey

White

Light Grey

Yellow

Apple Green

Teal

Regal Blue

Torris Blue

410 CHALLENGER

If you are a keen angler or just enjoy getting out and exploring rivers and bays, then a 410 Challenger is the boat for you.

The 410 Challenger is a classic V-nose punt design. The pronounced reverse chines provide a degree of stability at rest that is unmatched by many other boats in this class.

The 410 Challenger features a full floor, front and rear casting decks and generous integrated storage to help keep the boat tidy and clutter free.

The 410 Challenger's twin front 110 litre storage bins can be used as an ice box or storage for all the gear you need for a great day on the water.

The soft, quiet ride of the 410 Challenger distinguishes it from many other boats in its size class. The reason for the great ride lies in the Polyethylene hull, designed to absorb on-water vibration and noise.

Available in Open, Centre Console and Side Console models and in eight great classic Polycraft colours.

Casting platform

Specifications

Length:	4.10 m
Length (boat/motor/trailer):	5.20 m
Height on trailer:	1.35 m
Beam:	1.85 m
Depth:	0.75 m
Weight (inc. floors):	
Centre Console	305 kg
Open Boat	280 kg
Side Console	295 kg
Shaft length (Long):	20 inches
Max HP rating:	50 HP
Max transom weights	120 kg
Capacity:	4 people (320 kg)

Standard Features

1. Winch point
2. Anchor well
3. Cleat
4. Front stainless steel bow rails
5. Split front hatches with integrated storage
6. Casting platform
7. Non-slip floor
8. Rear stainless steel grab rails
9. Rear hatches with storage
10. Rod holders x 2
11. Aluminium transom plate

Pinstripes & Polycraft logo

Non-feedback steering

Optional Extras

Carpeted floor

Carpeted front & rear casting decks

Passenger pedestal box (Side Console)

Rear storage box

Side pockets

Survey standard level flotation

Refer to page 17 for more details

Open Boat

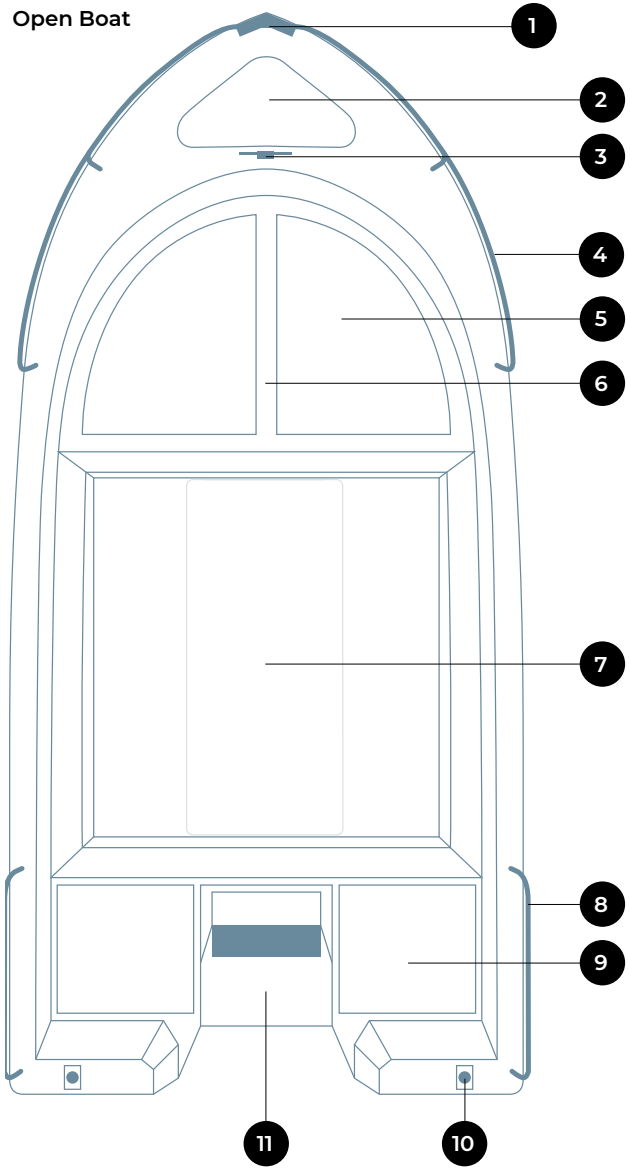

Range Features

Centre Console (only)	Side Console (only)
Centre console & screen rail	Driver's pedestal box & seat
Non-feedback steering	Non-feedback steering
	Side console & screen

Gull Grey

White

Light Grey

Yellow

Apple Green

Teal

Regal Blue

Torris Blue

450 DRIFTER

FRONTRUNNER

SIDE CONSOLE

CENTRE CONSOLE

The 450 Drifter is the most popular boat in the Polycraft range due to its all-round capabilities both inshore and offshore.

Available in Frontrunner, Runabout, Centre Console, Side Console and Open models, this is the boat that will make every day on the water a day to remember.

Whether you are out fishing or just enjoying a relaxing day on the water with family and friends there is a 450 Drifter model that will meet your needs.

The 450 Drifter offers the stability normally associated with much larger boats, while at the same time retaining the benefits of being easy to tow and maintain.

With generous storage under the split front hatch, as well as in the two huge rear storage spaces, this boat is built for the fisherman and boater who likes to keep a tidy deck.

Available in eight great, classic Polycraft colours.

Specifications

Length:	4.50 m
Length (boat/motor/trailer):	6.20 m
Height on trailer:	1.55 m
Beam:	1.99 m
Depth:	0.92 m
Weight (inc. floors):	
Centre Console	320 kg
Frontrunner	340 kg
Open	300 kg
Runabout	340 kg
Side Console	315 kg
Shaft length (Long):	20 inches
Max HP rating:	60 HP
Max transom weights	120 kg
Capacity:	5 people (400 kg)

Standard Features

1. Bow roller
2. Anchor well
3. Cleat
4. Front stainless steel bow rails
5. Split front hatches with storage
6. Casting platform
7. Non-slip Floor
8. Rear stainless steel grab rails
9. Rear hatches with storage
10. Rod holders x 2
11. Aluminium transom plate

Pinstripes & Polycraft logo

Winch point

Optional Extras

Carpeted floor, front & rear cast decks

Rear casting deck insert

Side pockets

Ski hooks

70 litre underfloor fuel tank (with sender)

Survey standard level flotation

Refer to page 17 for more details

Open Boat

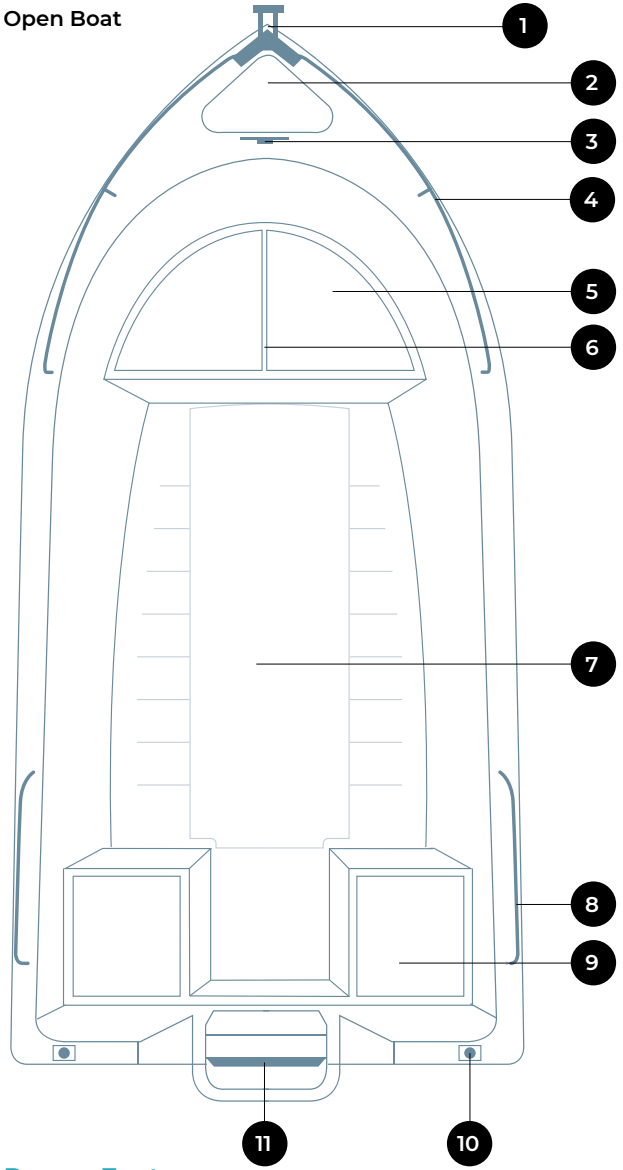

Range Features

Centre Console (only)
Centre console, screen & hand rail
Non-feedback steering
Side Console (only)
Side console & screen
Non-feedback steering

Frontrunner (only)
Console & screen x 2
Pedestal box & seat x 2
Non-feedback steering
Runabout (only)
Low profile front bonnet
Pedestal box & seat x 2
Non-feedback steering

Gull Grey

White

Light Grey

Yellow

Apple Green

Teal

Regal Blue

Torris Blue

480 BRUMBY

POLYCRAFT

CUDDY CABIN
POLYCRAFT
HONDA

CENTRE CONSOLE
POLYCRAFT

FRONTRUNNER
POLYCRAFT
HONDA

The 480 Brumby is a popular choice with customers because it ticks all the boxes, being equally suitable for fishing and family boating alike.

The 480 Brumby, available in Frontrunner, Cuddy Cabin, Centre Console, Rear Centre Console and Side Console models.

All models feature the unique Polycraft soft, quiet ride and legendary durability that Polycraft boats are renowned for.

The 480 Brumby is fitted with stylish rounded consoles, that include locations for sounders, gauges and other electronics.

The 480 Brumby has an optional spacious front lounge and comes standard with a rear lounge that can be fitted out with comfortable optional upholstery. Additional storage is available in the front lounge, in the stern and under the swivel seats.

Other great features of the 480 Brumby include full pod transom, straight internal walls and wide gunwales.

Available in eight great classic Polycraft colours.

Specifications

Length:	4.80 m
Length (boat/motor/trailer):	6.60 m
Height on trailer:	2.50 m
Beam:	2.15 m
Depth:	1.01 m
Weight (inc. floors):	
Centre Console	540 kg
Cuddy Cabin	590 kg
Frontrunner	560 kg
Rear Centre Console	540 kg
Side Console	540 kg
Shaft length (Long):	20 inches
Max HP rating:	90 HP
Max transom weights	175 kg
Capacity:	6 people (480 kg)

Standard Features

1. Bow roller
2. Anchor well
3. Bollard (stainless steel)
4. Stainless steel bow rails
5. Front casting deck with integrated storage
6. Storage bin under deck
7. Rod holders
8. 70 litre underfloor fuel tank
9. Rear fold out lounge with integrated storage
10. Rear stainless steel grab/boarding rails
11. Transom storage box x 2
12. Transom plate

Pinstripes & Polycraft logo

Underfloor fuel tank

Optional Extras

Bow seating and storage (standard on 480 Frontrunner)

Hydraulic steering

Side pockets

Ski hooks

Survey standard level flotation

Refer to page 17 for more details

Centre Console

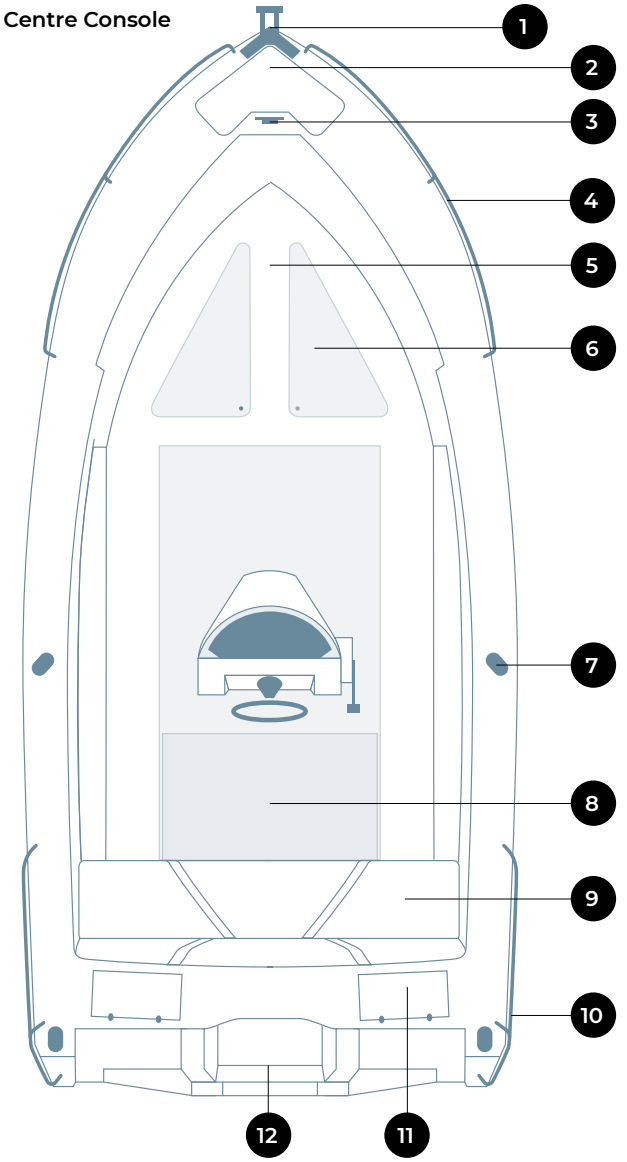

Range Features

Centre Console (only)

Centre console, screen & hand rail

Frontrunner (only)

Front lounge

Console & screen x 2

Pedestal box & seat x 2

Side Console (only)

Side console & screen

Drivers pedestal box & seat

Rear Centre Console (only)

Screen & handrail

Cuddy (only)

Cuddy cabin, hatch & windscreen

Pedestal box & seat x 2

Gull Grey

White

Light Grey

Yellow

Apple Green

Teal

Regal Blue

Torris Blue

530 WARRIOR

FRONTRUNNER

CUDDY CABIN

CENTRE CONSOLE

With the 530 Warrior available in Centre Console, Frontrunner and Cuddy Cabin, there is a model to suit nearly every boating application.

For those who enjoy lazy days out on the water relaxing with friends and family, or skiing and wake boarding, then you will appreciate the 530 Frontrunner. This model features comfortable seating for all the family, with a rear lounge and two swivel seats as standard. Access to the bow is easy via the walk-through windscreen.

If you want a boat that gives you the ability to fish the big rivers and impoundments, or to venture offshore for blue water pelagics, then the 530 Warrior Centre Console is the boat for you. With a generous front casting deck with integrated storage and a 2.40 m beam, this is a boat with an enormous amount of usable fishing space.

The 530 Warrior Cuddy Cabin provides the best of both worlds as a versatile fishing/family boat. Fish offshore for the big ones one day, and then pack a picnic lunch and get away to your favourite spot the next.

Centre Console view

Specifications

Length:	5.30 m
Length (boat/motor/trailer):	7.10 m
Height on trailer:	2.40 m
Beam:	2.40 m
Depth:	1.20 m
Weight (inc. floors):	
Centre Console	680 kg
Cuddy Boat	830 kg
Frontrunner	760 kg
Shaft length (Long):	20 inches
Max HP rating:	140 HP
Max transom weights	235 kg
Capacity:	7 people (560 kg)

Standard Features

1. Bow roller
2. Anchor well
3. Bollard (stainless steel)
4. Stainless steel bow rails
5. Front casting deck with integrated storage
6. Centre console with S/S screen rail
7. Carpeted floor
8. Double flip back seat with storage (CConsole only)
9. Rear fold down lounge
10. Rear lounge cushion & backrest
11. Transom storage box x 2
12. Engine well with aluminium reinforced transom plate
13. Rod holders x 4

200 litre underfloor fuel tank (with sender)

Bilge pumps x 2

Pinstripes & Polycraft logo

Optional Extras

Boarding ladder

Glove Box (Centre Console/Frontrunner)

Hydraulic steering

Side pockets

Ski hooks

Survey standard level flotation

Refer to page 17 for more details

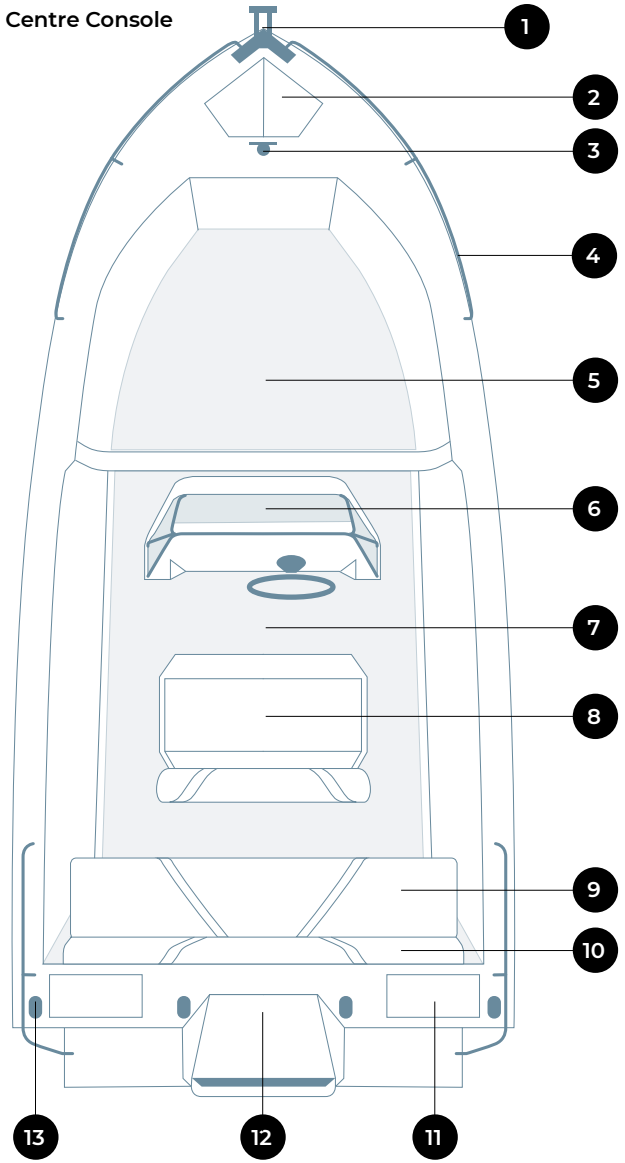

Range Features

Frontrunner (only)

Console & screen x 2

Pedestal box & seat x 2

Cuddy Cabin (only)

Cuddy Cabin

Pedestal box & seat x 2

Windscreen

Centre Console (only)

Centre console box

Driver storage seat with cushion back rest

Screen & handrail

Rear Centre Console (only)

Screen & handrail

Gull Grey

White

Light Grey

Yellow

Apple Green

Teal

Regal Blue

Torris Blue

599 Frontier

The flagship of the Polycraft range, the 599 Frontier has been designed to enhance your entire on-water boating experience.

The deep V-hull with distinctive reverse chines delivers a soft, quiet ride with unmatched stability at-rest.

The 599 Frontier Cuddy Cabin is well equipped with a rear fold down lounge, deluxe bucket seats, carpeted floors and a full wrap around windscreen, to provide protection from the elements for occupants as well as dash mounted electronics.

The dedicated offshore fisherman will appreciate the unique features of the 599 Frontier Centre Console model. To name just a few, a wide body console for protection from the elements and a driver storage seat with padded back rest.

Both fisherman and recreational boaters alike will appreciate the huge amount of internal space in this boat, thanks to its massive 2.50 m beam.

The exceptional Polycraft 599 Frontier is a boat that delivers big on performance, safety, stability and comfort.

Cuddy Cabin view

Specifications

Length:	6.10 m
Length (boat/motor/trailer):	8.20 m
Height on trailer:	2.50 m
Beam:	2.50 m
Depth:	1.40 m
Weight (inc. floors):	
Centre Console	940 kg
Cuddy Boat	1040 kg
Shaft length (Long):	25 inches
Max HP rating:	175 HP
Max transom weights	270 kg
Capacity:	8 people (640 kg)

Standard Features

1. Bow roller
2. Anchor well
3. Bollard (stainless steel)
4. Stainless bow rails
5. Front hatches with integrated storage
6. Carpeted floor
7. Centre Console with screen rail
8. Rod holders x 4
9. Double flip back seat with storage (CConsole only)
10. Rear fold down lounge with integrated storage
11. Rear lounge cushion & backrest
12. Transom storage box x 2
13. Engine well with aluminium reinforced transom plate

200 litre underfloor fuel tank (with sender)

Bilge pumps x 2

Pinstripes & Polycraft logo

Optional Extras

Bait and fillet board

Glove box

Boarding ladder

Hydraulic steering

Ski hooks (pair)

Bait board

Survey standard level flotation

Refer to page 17 for more details

Centre Console

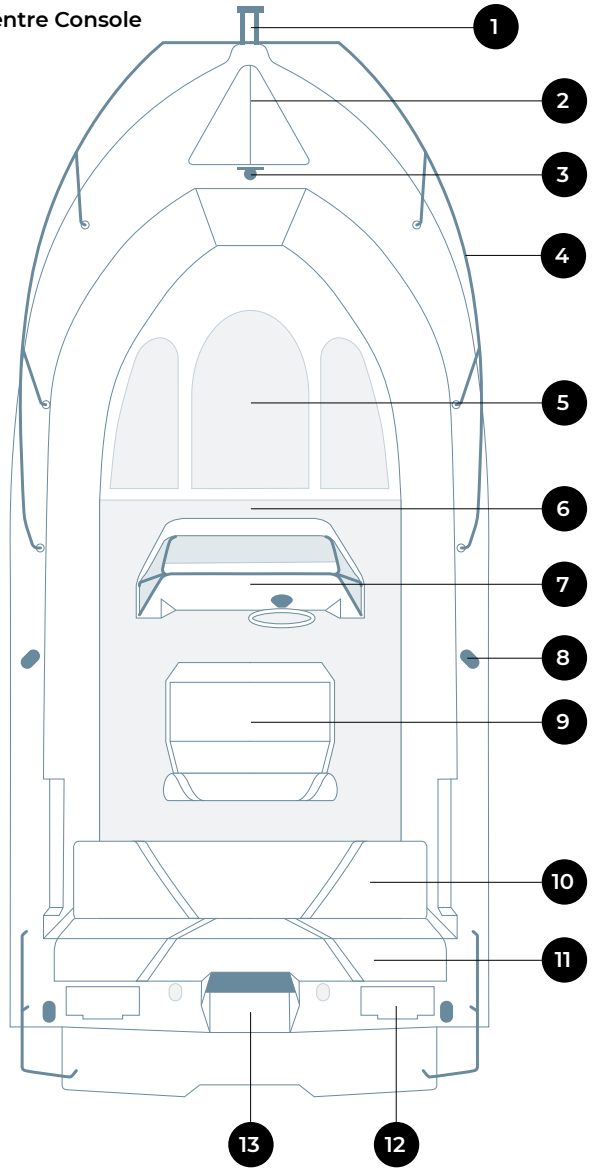

Range Features

Centre Console (only)
Wide body centre console
Screen & handrail
Driver storage seat with cushion & back rest
Rear Centre Console (only)
Screen & handrail

Cuddy Cabin (only)
Cuddy Cabin
Pedestal box & seat x 2
Windscreen

Gull Grey

White

Light Grey

Yellow

Apple Green

Teal

Regal Blue

Torris Blue

Polycraft Boats for Commercial Operators

Polycraft boats are well suited for commercial usage because of their stability, durability, low maintenance attributes and dual skin design. This dual skin design provides the required cavity for placement of positive flotation to be installed to attain the required Level Flotation format at a cost-effective price point.

Since Polycraft's inception in 2001 we have supplied significant amounts of boats in all models and configurations to the commercial sector for many and varied end users such as:

- ✓ commercial fisherman
- ✓ charter operators
- ✓ water taxi operators
- ✓ hire and drive businesses
- ✓ local councils
- ✓ government departments
- ✓ non-profit organisations

With a high percentage of these boats still in service today, which is a testament to a Polycraft Hulls durability, safety and longevity.

Polycraft hulls are compliant with the NSCV and are available in Exemption 40 and Exemption 02 (non-survey) classifications for commercial end users, for more information contact Polycraft on **1800 336 603**.

Stability

Low Maintenance

Dual Skin Hull

Level Flotation

"Because of the unique requirements of the South Australian Gulf channels and waterways we urgently needed a shallow water craft in our flotilla.

We chose Polycraft, and this vessel will be a huge benefit for our Coast resources."

Janet McDonald
Commander, SAF8 Coast Guard,
Port Augusta, SA.

The Australian Volunteer Coast Guard Association.

Polycraft Approved Trailers

2 EXTRA YEARS HULL WARRANTY*

Receive an extra 2 years hull warranty by purchasing a Polycraft approved trailer in conjunction with new Polycraft hull order placement.

Standard Hull warranty is increased from 4 years to 6 years on an approved Polycraft trailer.

Extended warranty is available on all Polycraft models ordered with an approved Polycraft trailer from July 1st, 2019.

All Polycraft boats must be trailered on a Polycraft approved trailer to retain the hull warranty.

These approved trailers will have skids positioned correctly to properly support your Polycraft boat as well as allow easy launch and retrieval.

To find out what trailers are approved by Polycraft call **1800 336 603** or go to **www.polycraft.com.au**

*Conditions apply.

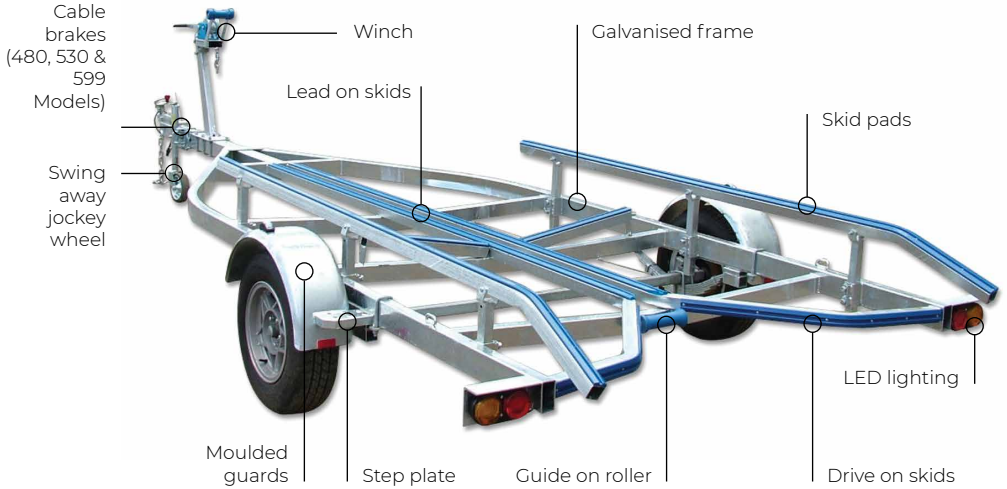

Optional & Standard Features	300 Open	410 Open	410 C/Con	410 S/Con	450 Open	450 F/Fun	450 C/con	450 S/Con	450 Runabout	480 C/Ccon	480 S/Con	480 F/Run	480 Cuddy	530 C/Con	530 F/Run	530 Cuddy	599 C/Con	599 Cuddy
Anchor well	S	S	S	S	S	S	S	S	S	S	S	S	S	S	S	S	S	S
Bait & fillet board					O	O	O	O	O	O	O	O	O	O	O	O	O	O
Bilge pumps auto	O	O	O	O	O	O	O	O	O	S	S	S	S	S	S	S	S	S
Boarding ladder		O	O	O	O	O	O	O	O	O	O	O	O	O	O	O	O	O
Boarding/grab rail		S	S	S	S	S	S	S	S	S	S	S	S	S	S	S	S	S
Bollard										S	S	S	S	S	S	S	S	S
Bow rails		S	S	S	S	S	S	S	S	S	S	S	S	S	S	S	S	S
Bow roller					S	S	S	S	S	S	S	S	S	S	S	S	S	S
Cleat	S	S	S	S	S	S	S	S										
Carpeted floor	O	O	O	O	O	O	O	O	O	S	S	S	S	S	S	S	S	S
Carpet front & rear casting decks		O	O	O	O	O	O	O	O									
Centre console seat & back rest														S			S	
Console grab rail				S										S			S	
Consoles			S	S		S	S	S		S	S	S		S	S		S	
Cuddy cabin									S				S			S		S
Front casting deck insert										O	O	O						
Front casting deck		S	S	S	S	S	S	S		O	O	O						
Front hatch storage										O	O							
Bow seating										O	O	S						
Fuel tank survey Cofferdam format					O	O	O	O	O	O	O	O	O	O	O	O	O	O
Fuel tank 70 litre					O	O	O	O	O	S	S	S	S					
Fuel tank 130 litre														S	S	S		
Fuel tank 200 litre																	S	S
Glovebox						O			O					O	O		S	S
Gunwhale grab rail	S	S	S	S	S	S	S	S	S	S	S	S	S	S	S	S	S	S
Long storage seat					O			O										
Hydraulic steering						O	O	O	O	O	O	O	O	O	O	O	O	O
Nav light assembly	O	O	O	O	O	O	O	O	O	O	O	O	O	O	O	O	O	O
Non feed back steering			S	S		S	S	S	S	S	S	S	S	S	S	S	S	S
Pedestal box and seat				S+O		Sx2			Sx2			Sx2	Sx2		Sx2	Sx2		Sx2
Pin stripes		S	S	S	S	S	S	S	S	S	S	S	S	S	S	S	S	S
Polycraft logo	S	S	S	S	S	S	S	S	S	S	S	S	S	S	S	S	S	S
Rear casting deck insert		O	O	O	O	O	O	O	O									
Rear fold down lounge										S	S	S	S	S	S	S	S	S
Rear lounge b/rest & cushion										O	O	O	O	S	S	S	S	S
Rear storage bin		O	O	O	O	O	O	O	O									
Rod holders	S	S	S	S	S	S	S	S	S	S	S	S	S	S	S	S	S	S
Rowlocks	O																	
Screen rail			S				S			S				S			S	
Side console				S				S			S							
Side pockets		O	O	O	O	O	O	O	O	O	O	O	O	O	O	O	O	O
Ski hooks	O	O	O	O	O	O	O	O	O	O	O	O	O	O	O	O	O	O
Survey standard	O	O	O	O	O	O	O	O	O	O	O	O	O	O	O	O	O	O
Transom storage box										Sx2	Sx2	Sx2	Sx2	SX2	SX2	SX2	Sx2	Sx2
Transom plate	S	S	S	S	S	S	S	S	S	S	S	S	S	S	S	S	S	S
Transom plate with splash plate					S	S	S	S	S	S	S	S	S	S	S	S		
Winch point	S	S	S	S	S	S	S	S	S	S	S	S	S	S	S	S	S	S
Windscreen			S	S		S	S	S	S	S	S	S	S	S	S	S	S	S

Recommended Options

LEGEND

S = Standard Feature

O = Optional Feature

Sx2 = Standard Feature x Quantity

S+O = Standard Feature + Optional Extra

The table to left gives you a comprehensive list of all standard and optional features across the entire Polycraft range of boats.

The check list boxes to the right are recommended accessory when considering your Polycraft purchase.

300 TUFFY

- ☐ Carpeted floor
- ☐ Polycraft approved trailer

410 CHALLENGER

- ☐ Carpeted floor
- ☐ Carpeted front & rear casting decks (inc extra rear lid)
- ☐ Level flotation*
- ☐ Polycraft approved trailer
- ☐ Rear storage box
- ☐ Side pockets
- ☐ Ski hooks

450 DRIFTER

- ☐ Bait & fillet board
- ☐ Carpeted floor
- ☐ Carpeted front & rear casting deck (inc extra rear lid)
- ☐ Cushion set – front
- ☐ Cushion set – rear
- ☐ Glovebox (Frontrunner only)
- ☐ Level flotation*
- ☐ Long storage seat (open & side console)
- ☐ Polycraft approved trailer
- ☐ Rear storage box
- ☐ Side pockets
- ☐ Ski hooks
- ☐ 70 Litre underfloor fuel tank

480 BRUMBY

- ☐ Bait & fillet board
- ☐ Glovebox (Frontrunner only)
- ☐ Front hatch storage
- ☐ Front lounge
- ☐ Hydraulic steering
- ☐ Level flotation*
- ☐ Polycraft approved trailer
- ☐ Rear back rest & lounge cushion
- ☐ Side pockets
- ☐ Ski hooks

530 WARRIOR

- ☐ Bait & fillet board
- ☐ Boarding ladder
- ☐ Glovebox
- ☐ Hydraulic steering
- ☐ Level flotation*
- ☐ Polycraft approved trailer
- ☐ Side pockets
- ☐ Ski hooks

599 FRONTIER

- ☐ Bait & fillet board
- ☐ Boarding ladder
- ☐ Glovebox
- ☐ Hydraulic steering
- ☐ Level flotation*
- ☐ Polycraft approved trailer
- ☐ Side pockets
- ☐ Ski hooks

For a complete guide to options and features visit:
www.polycraft.com.au

*Conditions apply

How Tough are Polycraft Boats?

Mick's Case – 100km highway crash

Mick was towing his boat back home after a fishing trip to Hinchinbrook ...

Doing 100km/hour on the Bruce Highway, he heard an almighty crashing sound and saw his boat skidding along the bitumen, then catapulting into a cane drain. What should have been a life ending experience for any boat, ended up being a few hardly noticeable small surface abrasions. Mick said he was amazed at how tough the Polycraft boats were when pushed past any normal boat limits.

He was equally impressed with how quick the Polycraft was to fix, to the point where the hull looked as good as new.

The repair job was easy as ...

Mark's Case – squashed by a 124ft superyacht

Mark Schmack, the Operations Manager for Orakei Marina in New Zealand picks up the story ...

"We'd just launched the new Ermis 2 (a 38m (124ft) superyacht capable of doing 60 knots) when there were a few problems with the berthing and the Polycraft tender ended up being caught between Ermis2 and the dock. The driver jumped out just in time to see both port and starboard sides of the Polycraft bend up and smash the centre console windscreen and then also hit the motor cover. You can see on the motor where it hit."

This is the picture of the Polycraft after the accident and apart from a buckled bowrail, overall it's not looking too bad."

Do you have an interesting story to share?
Send your photos and story to polycraft@polyindustries.com

Boat Range

300 TUFFY

Tuff Tender

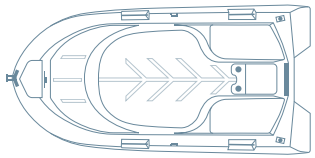

Tuffy 300

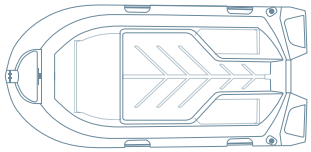

410 CHALLENGER

Open

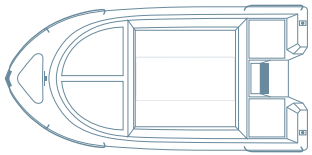

Side Console

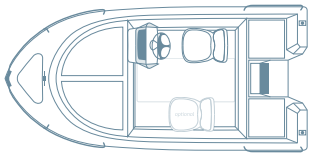

Centre Console

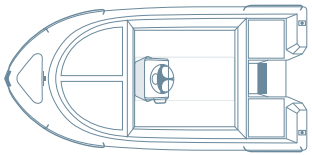

450 DRIFTER

Open

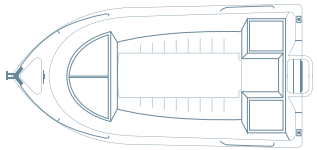

Centre Console

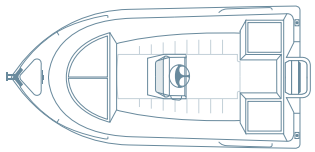

Runabout

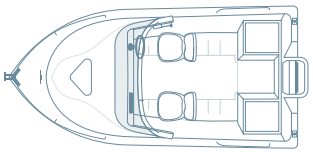

Frontrunner

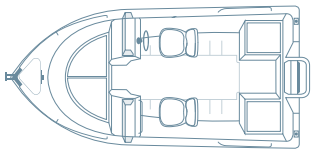

Side Console

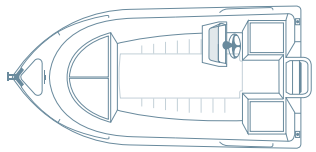

480 BRUMBY

Centre Console

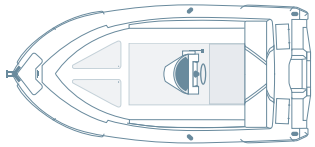

Rear Centre Console

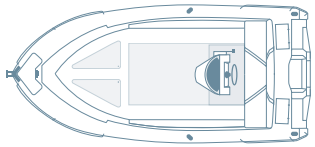

Side Console

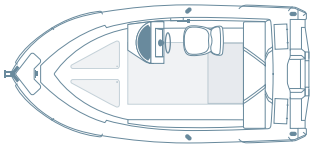

Frontrunner

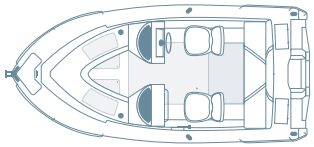

Cuddy Cabin

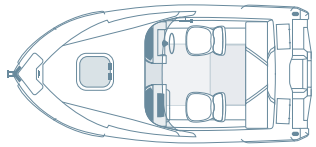

530 WARRIOR

Centre Console

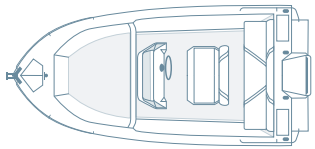

Front Runner

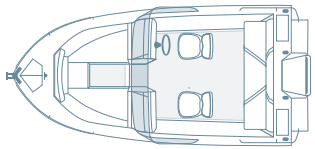

Cuddy Cabin

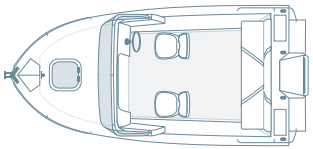

599 FRONTIER

Centre Console

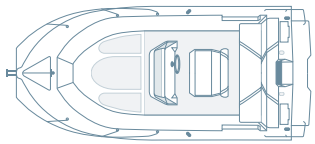

Cuddy Cabin

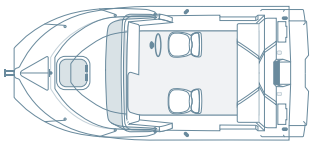

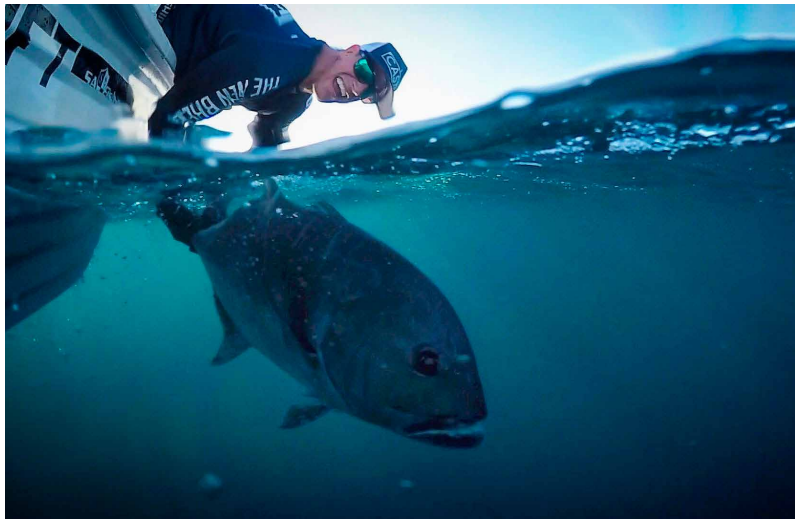

*Warranty

All Polycraft boats must be trailered on a Polycraft approved trailer to retain your hull warranty.

*Conditions apply.

https://www.polycraft.com.au/warranty-conditions

To learn more about Polycraft boats, download the latest brochures, read reviews, watch on-water video footage and also find your closest Polycraft dealer, visit:

www.polycraft.com.au

1800 336 603

AUSTRALIAN STANDARD
AS1799.1
CONDITIONS APPLY

- Soft, quiet ride
- Strong and durable
- Awesome on water performance
- Easy to clean and maintain

DISCLAIMER

This brochure is designed to provide readers with an introduction to Polycraft's products (including available optional extras). Because of changes in conditions and circumstances, Polycraft reserves the right at any time, and without notice, to discontinue or change the features, designs, materials, colours, specifications and prices of it products, and to either permanently or temporarily withdraw any such products from the market without incurring any liability to any prospective purchaser. Details referred to in this brochure are based on pre-production specifications and could be altered or deleted prior to the boats sale date. Because of variations which occur in manufactured products, all capacities, measurements, dimensions and weights quoted should be taken as approximate only and are subject to change. Polycraft reserves the right to discontinue or change any of the boat hull colours and interior trims referred to in this brochure at any time and without notice. Every effort has been made to depict boat colours and trims as realistically as possible in this brochure, however some variations may occur due to printing limitations.

NATIONAL POLY

In need of a Water Tank?

For an extensive range of water tanks solutions, visit:
www.nationalpolyindustries.com.au